Building Structures, Geotechnics and Concrete Department

LZK Building Structures and Geotechnics Laboratory

TEST REPORT Nº LZK02-02232/18/Z00NZK

This research report presents the results of research within the scope of accreditation and non-accredited results.

This report was issued in triplicate, two of which was received by the Client and one remained at the ITB.

Client:	*ITW Befestigungssysteme GmbH*
Client address:	*30966 Hemmingen, Carl-Zeiss Straße 19, Germany*

INFORMATION ABOUT PRODUCT

Manufacturer:	*ITW Befestigungssysteme GmbH* *30966 Hemmingen, Carl-Zeiss Straße 19, Germany*
Name and adress of factory:	*not specified*
Product:	*Powder-actuated fastener for use in concrete*
Technical specification	*EAD 330083-01-0601*
Information about product, intended use, and the number of the applicable system of assessment and verification of constancy of performance	*Power-actuated fastener for the fixing of ETICS in concrete, system 2+*
Unique identification code of the product-type:	*InsulFast*

INFORMATION ABOUT TEST ITEM

Test item: name, description, condition, identification	*Powder-actuated fastener for use in concrete InsulFast* *(Detailed information about the test object obtained from the point. no.1 report)*
Date of receipt /sampling:	*28.08.2018*
Nº of receipt /sampling protocol:	*LZK00-02232/18/Z00NZK* *Management procedure PZ ZLB 18 – samples delivered to the laboratory by the client (for details see the point no. 1 of this report)*

INFORMATION ABOUT TESTS		
Test commencement date:	*13.09.2018*	
Test completion date:	*21.09.2018*	
TESTED CHARACTERISTIC	**TEST METHOD**	**REMARKS**
Characteristic load	***EAD 330965-00-0601, test A1***	Outside the scope of accreditation
Zinc plating	***PB LOK-B52/2/11-2004***	—

1. The subject of laboratory tests

1.1. Specification of anchors

Specification of samples delivered to ITB LZK Lab (Katowice, Poland).

Table 1: *Specification of samples and materials*

Item	Name	Date of receipt sampling
1	InsulFast 100	28.08.2018 (x100 pieces)
2	InsulFast 120	
3	Tool P800InsulFast	28.08.2018 (1 piece)
Anchor		Materials (manufacturer's declaration)
InsulFast 60 ÷ 200		carbon steel o $R_m \geq 600$ MPa (HC6-27 anchor); steeve: polypropylene Moplen EP300K – black 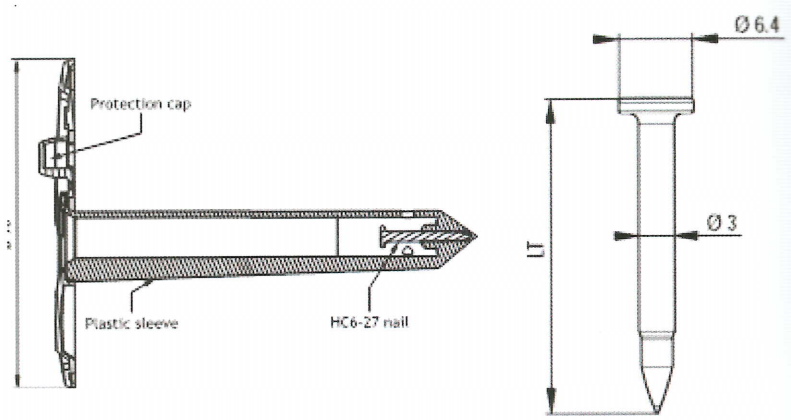

1.2. Specification of base materials

The base material is presented in Table 2.

Table 2: *Dimensions, compressive strengths and bulk densities of the materials*

Material	Min. density / strength	Density / strength
Concrete C20/25	f_c [Mpa] ≥ 28 [1)]	ρ [kg/dm^3] ≥ 2,25 [2)]
[1)2)] on the basis of own research (card PB-106)		

2. Test results of the anchor

2.1. Tests results

The installation characteristics are given in the Table 3. The test results are given in the Table 4 ÷ 5.

Table 3: *Installation characteristics*

Anchor	InsulFast
Tool	P800InsulFast
Overall anchor embedment depth h_{ef} [mm]	15

Table 4: *Test results - characteristic load – acc. EAD 330083-01-0601, test F3*

Anchor	Base material	n	F_u [kN] [1]	$F_{u,m}$ [kN] [2]	$F_{u5\%}$ [kN] [3]	s [kN] [4]	v [%] [5]	U [kN] [6]	$f_{c,test}$ [MPa] [7]	Failure
C6 / HC6	concrete C20/25	50	0,77 0,90 0,61 0,68 0,70 0,77 0,60 0,82 0,71 0,80 0,90 0,66 0,70 0,80 0,90 0,66 0,70 0,60 0,90 0,90 0,82 0,72 0,70 0,66 0,80 0,60 0,70 0,77 0,72 0,90 0,92 0,90 0,66 0,78 0,88 0,80 0,83 0,62 0,66 0,64 0,72 0,58 0,80 0,90 0,82 0,70 0,66 0,68 0,60 0,70	0,75	0,55	0,10	14	0,03	34,5	50 x plate deformation

[1] F_u - ultimate load in a test [kN]
[2] $F_{u.m}$ - mean ultimate load in a test series [kN]
[3] $F_{u5\%}$ - 5%-fractile of the ultimate load in a test series [kN] acc. EAD EAD 330965-00-0601
[4] s - standard deviation [kN]
[5] v - coefficient of variation [%]
[6] The uncertainty of the measurement is for a confidence level of 95 % and uncertainty factor k=2,78 (n=5 tests in series) acc. card LOK-ETAG014 (related to the accuracy of the devices used)
[7] $f_{c,test}$ – test compressive strength of concrete [MPa]

Table 5: *Zinc plating*

Anchor	Ultimate zinc plating [µm]			Mean zinc plating [µm]	Standard deviation s [µm]	Coefficient of variationi v [%]	Uncertainty of the measurement [µm]
InsulFast (HC6-27)	8,86 9,38 10,10	10,90 9,31 9,77	9,30 8,79 8,45	9,69	0,70	7	1,01
	9,95 9,71 10,20	9,71 9,87 10,60	8,81 10,00 10,10				
	10,20 9,30 10,60	8,93 10,60 10,30	,890 10,40 8,64				

The uncertainty of the measurement is for a confidence level of 95 % and uncertainty factor 2,00 (n=27 tests in series) acc. to card LOK-B52STAL (related to the accuracy of the devices used)

3. Results summary (outside of accreditation)

The results summary is given in the Table 6.

Table 6: *Results summary*

Tool	Anchor	Base material	h_{ef} [mm] [1)]	h_{min} [mm] [2)]	s_{min} [mm] [3)]	c_{min} [mm] [4)]	N_{Rk} [kN] [5)]
P800InsulFast	InsulFast 60 ÷ 200	Concrete C12/15	15	100	200	100	0,35
		Concrete C20/25 ÷ C50/60					0,55

[1)] h_{ef} - overall anchor embedment depth [mm]
[2)] h_{min} - min. concrete thickness [mm]
[3)] s_{min} - min. spacing [mm]
[4)] c_{min} - min. edge distance [mm]
[5)] N_{Rk} - tension characteristic resistance (5%-fractile of the ultimate load) [kN] for KOT

To calculate the design resistance, the following factor is assumed: pull-out/ γ_m = 2,00 acc. to EAD 330965-00-0601

Responsible for the test
Daniel Dudek, PhD

Authorizing person
Mariusz Wołyniak, MSc

Laboratory manager
Artur Piekarczuk, PhD

Katowice, Poland, 17.10.2018

Testing Laboratory declares that test results relate only to the object under test. Test Report should not be reproduced without a written permission of Testing Laboratory in any other form than as a whole.

Test Report is not substitute for documents required for placing on the market and making available of construction products