ACCESSORIES

Car Adapter Enables you to re-charge your battery with your vehicle's electrical system.		Part No. 900507
Battery Cell	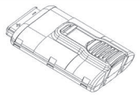	Part No. 018880
Battery Charger	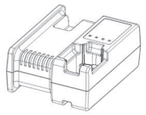	Part No. 018881 (EU)
Cable		Part No. 018885 (EU)
Hex Key		Part No. 401331
Orange Safety Glasses		Part No. 014121
Paslode Intensive Tool Cleaner 300 ml	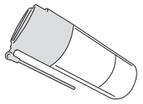	Part No. 115251
Paslode Impulse Lubricating Oil		Part No. 401482
Carrying Case Standard		Part No. 014974
No-Mar Contact Element	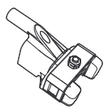	Part No. 013211
Cleaning Kit (Blister) Contains all the necessary to clean any Impulse tool		Part No. 013690
Maintenance Kit (Filter + o'ring)		Part No. 013231

Paslode
An Illinois Tool Works Company
Route de Lyon - BP 104
F - 26501 Bourg Les Valence - Cedex France

018187-1
01/15

Paslode®
Impulse®

Part No. 014185

IM100Ci

IMPORTANT!
DO NOT DESTROY
Always refer to operating and safety instructions **(#018339 & #014744)** for detailed information on this tool. It is the customer's responsibility to have all operators and service personnel read and understand this information.

TOOL SCHEMATIC AND PARTS

IM100Ci

PART LEGEND

Part No. 014185

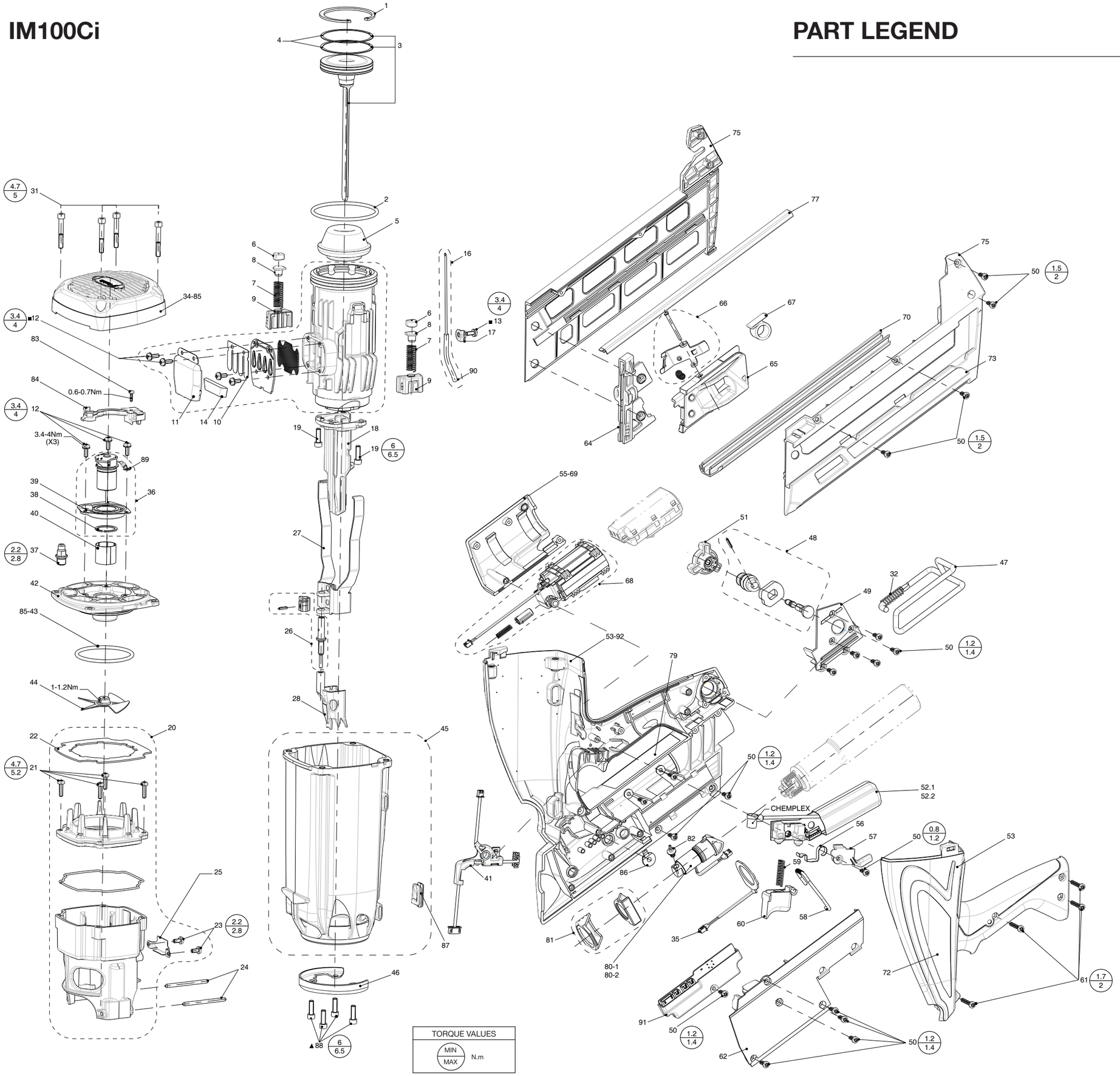

1	336680	1	Retainer ring
2	013743	1	Cylinder o-ring
3	014720	1	Piston assembly
4	336670	2	Piston ring
5	014721	1	Bumper
6	013758	2	Rubber stop
7	013779	2	Combustion chamber spring
8	019071	2	Combustion chamber spring guide
9	019072	2	Combustion chamber spring assembly
10	336560	1	Reed valve
11	336580	1	Muffler cover
■ 12	405141	5	Screw swage form 4-11
■ 13	405140	1	Screw swage form 4-9
14	336570	1	Muffler
15	014722	1	Cylinder assembly
16	013737	1	Injection pipe assembly
17	013738	1	Bracket fuel line
18	014723	1	Nose
■ 19	013796	2	Screw CHC M5-16
20	013749	1	Combustion Chamber Assembly
21	900456	4	Screw swage form 4-15
22	013750	1	Seal
23	013805	2	Screw taptite 4x8
24	013781	2	Combustion chamber stop pin
25	019073	1	Combustion chamber lock out
26	014725	1	Knob assembly
27	013744	1	Upper probe assembly
28	019074	1	Probe
31	013797	4	Screw CHC M5-35
32	019075	1	Hook spring
33	013748	1	Filter
34	019121	1	Cap
35	019076	1	Antenna
36	019077	1	Motor assembly
37	013731	1	Spark plug assembly (901706)
38	321610	1	Retaining ring
39	334310	1	Motor mount
40	321590	1	Motor sleeve
41	019078	1	Wire assembly
42	013740	1	Cylinder head
43	321650	1	Cylinder head O-Ring
44	321660	1	Fan blade assembly
45	013769	1	Carter
46	013787	1	Nose protection
47	019079	1	Hook assembly
48	013792	1	Magazine ball assembly
49	019081	1	Cover balll
50	013798	19	Screw Eco-syn Torx 4x12
51	013793	1	Magazine knob
52-1	019096	1	Red S-MEFI
52-2	019097	1	Black S-MEFI
53	019082	1	Handle assembly
55	019106	1	Handle label
56	013734	1	Contact level
57	013785	1	Contactor plate
58	019084	1	Combustion chamber lock bar
59	013783	1	Trigger spring
60	019119	1	Trigger
61	013799	4	Screw Eco-syn Torx 4x25
62	019085	1	Handle cover
64	014729	1	Shear block
65	013761	1	Follower assembly
66	014730	1	Follower button assembly
67	013767	1	Follower spring
68	019086	1	Battery terminal assembly
69	019092	1	Battery cap
70	014731	1	Cover plate magazine
72	019115	1	Assembly carter labels
73	019104	1	Magazine label
75	013759	1	Magazine assembly
77	013763	1	Nail channel
79	019105	1	Name plate label
80-1	019116	1	Red electrovalve assembly
80-2	019117	1	Black electrovalve assembly
81	019088	1	Eject button assembly
82	013739	1	Electrovalve plug connection
83	404702	1	Screw thread forming 6 x 3/8
84	013808	1	Wires guide
85	013231	1	Maintenance kit (filter + o'ring)
86	019089	1	Power button
87	013812	1	Electrovalve heat protection
▲ 88	013813	4	Screw CHC M5-16
89	014771	1	Fan motor ground wire
90	014772	1	Rubber fuel injection tube
91	019091	1	DEL assembly
92	019118	1	Gauges sticker

■ Apply Loctite RC-620 (Green) - ▲ Apply Loctite 243 (Blue)